HG-D201HB AL HEATSINK DIGITAL SERVO(Heli Tail Type)

◆TECHNICAL DATA

CONTROL SYSTEM	: PULSE WIDTH CONTROL
OPERATING VOLTAGE	: 4.8V ONLY
OPERATING TRAVEL	: 30°/ ONE SIDE PULSE TRAVELING 370usec
DIRECTION	: COUNTERCLOCKWISE/ PULSE TRAVELING 1500 TO 1870
TEST VOLTAGE	: AT 4.8V
OPERATING SPEED	: 0.07sec/60°
STALL TORQUE	: 1.0Kg.cm(13.88oz.in)
DYNAMIC TORQUE	: 0.9Kg.cm(12.50oz.in)
IDLE CURRENT	: 6.0mA AT STOPPED
RUNNING CURRENT	: 200mA AT NO LOAD
DEAD BAND WIDTH	: 2us

◆FEATURES

AMPLIFIER TYPE	: DIGITAL PULSE WIDTH CONTROLLER & FET DRIVER
LONG LIFE POTENTIOMETER	: 500,000 cycles
MOTOR TYPE	: METAL BRUSH 3POLE MOTOR
TOP BALL BEARING	: MR74 BALL BEARING
GEAR MATERIAL	: ALL HEAVY DUTY CARBONITE GEARS
HORN GEAR SPLINE	: 15 SEGMENTS/ Ø3.96(FUTABA TYPE)
SPLINED HORNS	: 4 CLASS
CONNECTOR WIRE LENGTH	: 150mm(5.91in)
CONNECTOR WIRE STRAND COUNTER	: 0.12mmx7EA

◆DIMENTIONS

SIZE	: 23.0x11.4x24.1mm(0.91x0.45x0.94in)
WEIGHT	: 9.83g(0.35oz)

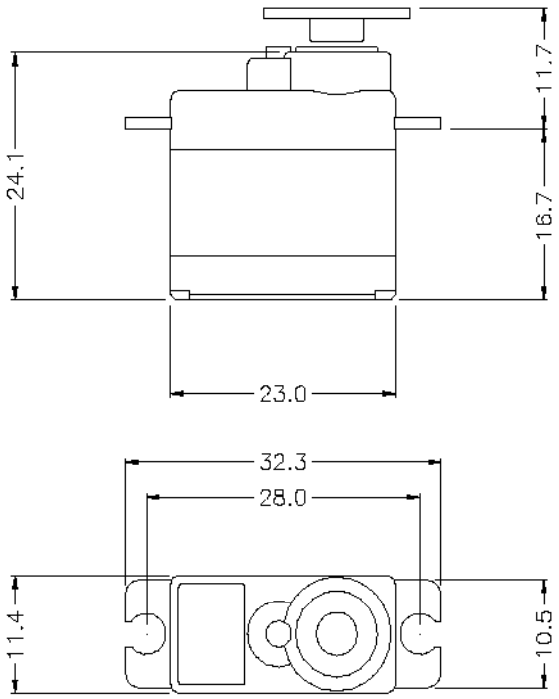

HOTGEAR CO.
Radio Controlled Models